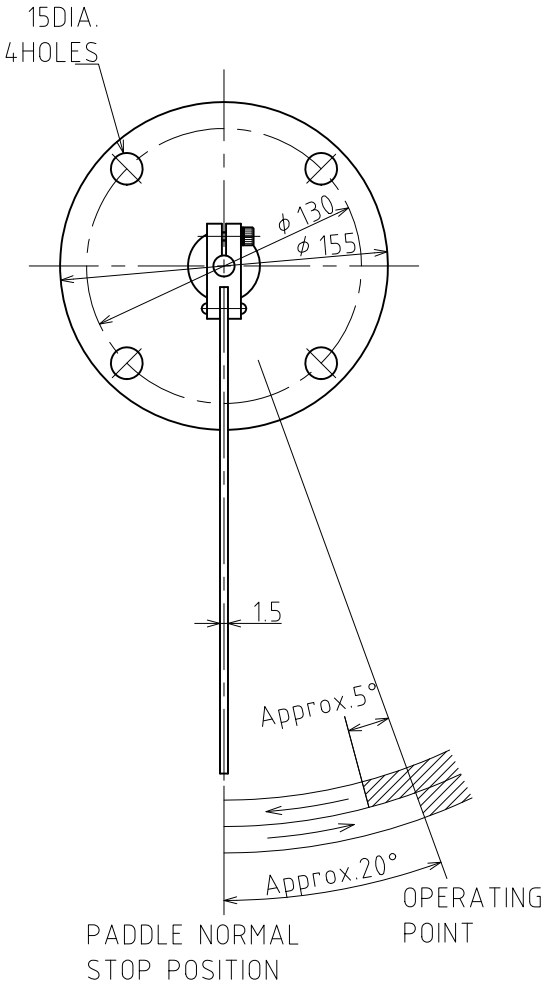

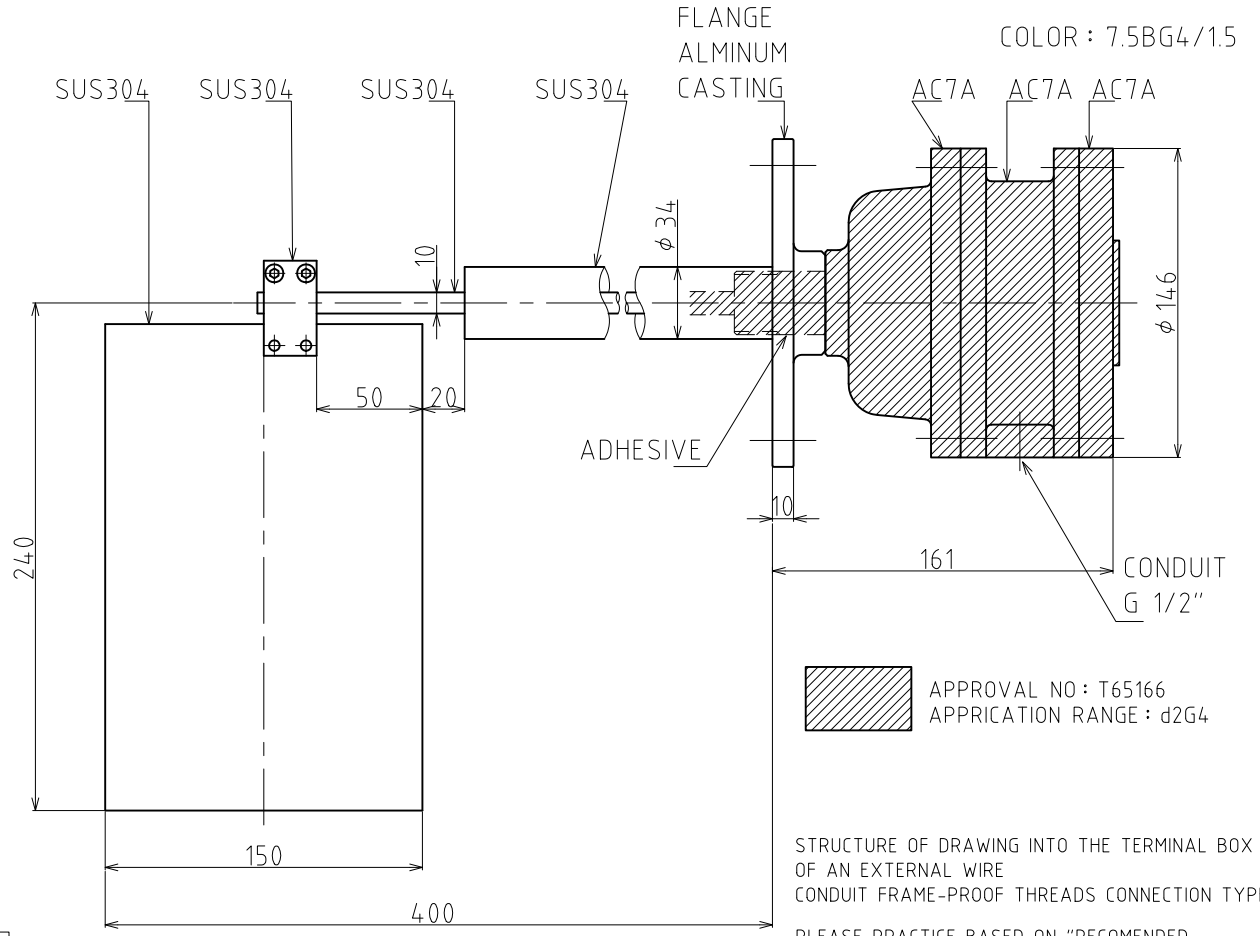

APPROVAL NO : T65166
APPRICATION RANGE : d2G4

STRUCTURE OF DRAWING INTO THE TERMINAL BOX OF AN EXTERNAL WIRE
CONDUIT FRAME-PROOF THREADS CONNECTION TYPE

PLEASE PRACTICE BASED ON "RECOMENDED PRACTICES FOR EXPROSION-PROTECTED ELECTRICAL INSTALLATIONS IN GENERAL INDUSTRIES" PUBLISHED BY THE NATIONAL INSTITUTE OF INDUSTRIAL SAFETY. ABOUT WIRING IN A TERMINAL BOX AND DRAWING INTO THE TERMINAL BOX OF AN EXTERNAL WIRE, GROUNDING ETC.

AMBIENT TEMPERATURE:-10～+40℃

250V AC 10A RESISTANCE ROAD

TERMINAL C-L : ON
C-H : OFF

TERMINAL C-L : ON
C-H : OFF

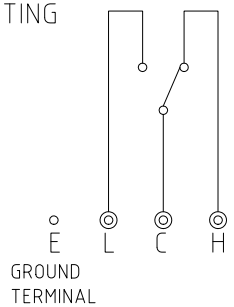

Q'ty :

図暦 CHANGE NOTICE	承認 APPROVED	検図 CHECKED	製図 DRAWN ohno		名称 TITLE PA-1E FLOW SWITCH
	第三角法 THIRD ANGLE PROJECTION	尺度 SCALE 1:2.5	日付 DATE Sep.5.2014	東和制電工業株式会社 TOWA SEIDEN INDUSTRIAL CO., LTD.	図面番号 DRG. No. HY-3108